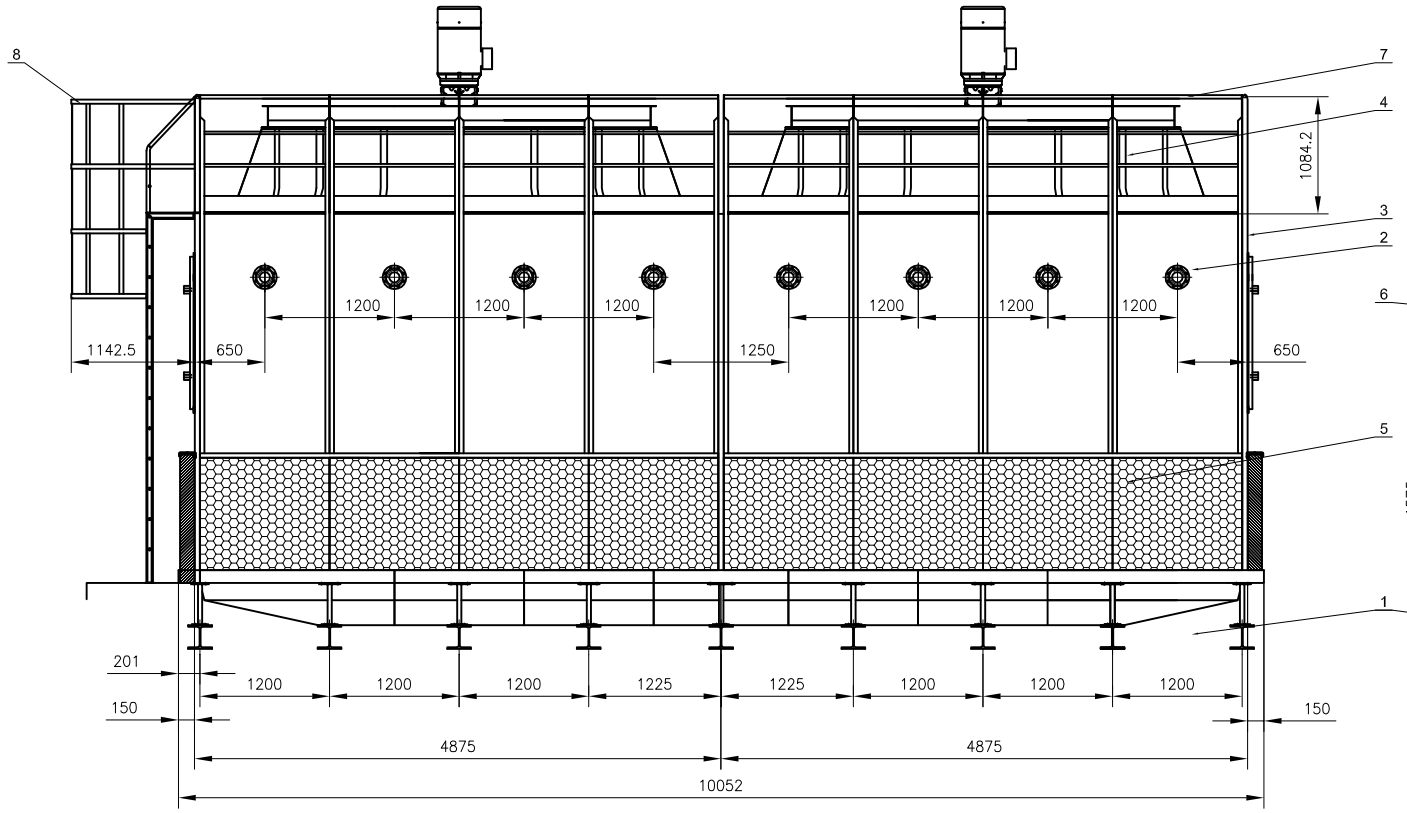

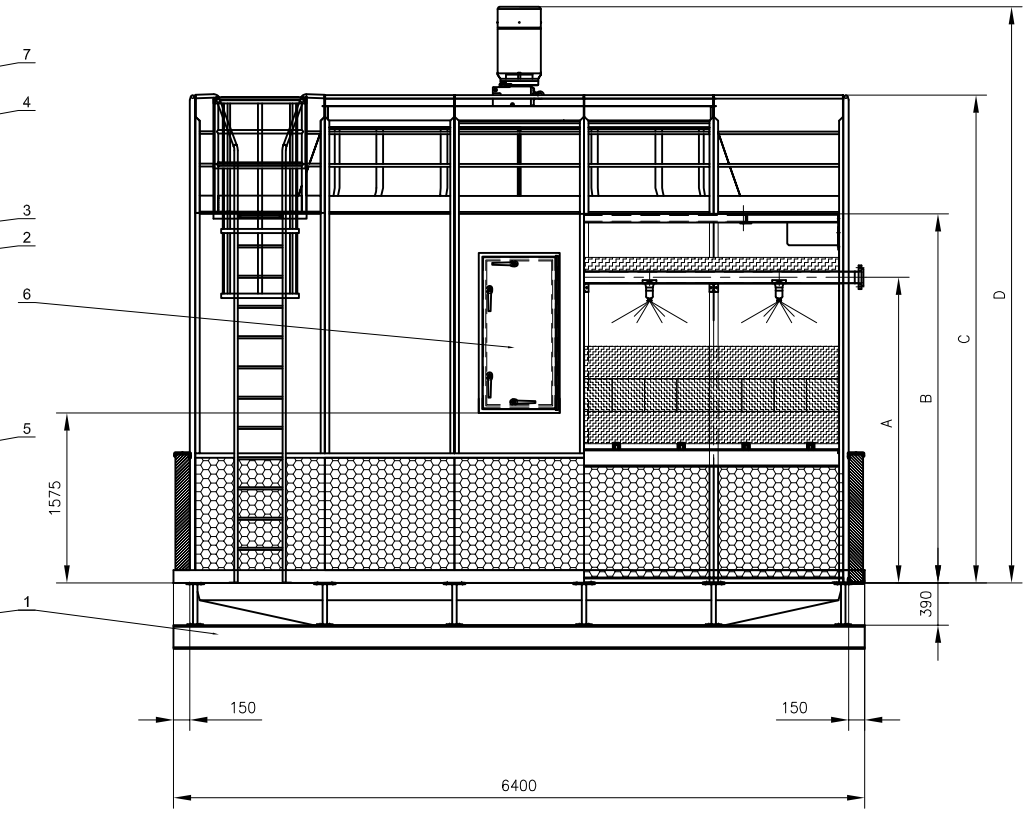

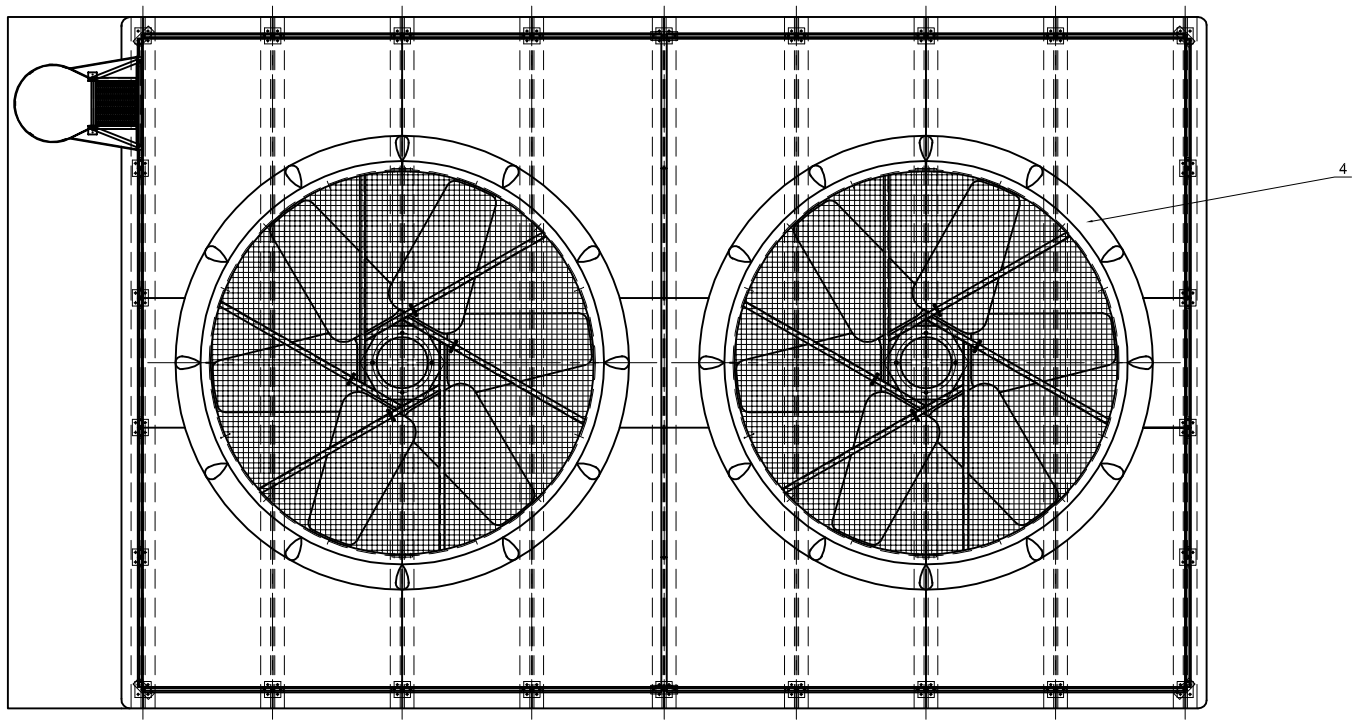

Comments:

8	Ladder + Antifall Protection	Left Side
7	Safety Rail	
6	PP Access Door	Left / Right
5	Inlet air Louvers	
4	Fan stack	
3	Structure frame with polyester wall plates	
2	Inlet flanges DN 100 PN 10	Front Side
1	Polyester Basin	

	A (mm)	B (mm)	C (mm)	D (mm)	Net weight (kg)	Operation Weight (kg)
EWB 5750/09	2830	3416	4516	5335	11600*	16400*
EWB 5750/12	3130	3716	4816	5635	12100*	17400*
EWB 5750/15	3430	4016	5116	5935	12600*	18400*

Rev.	Changes	Date	Name
1	Pos. drift elimin., inlet, door	12/06/15	Y. Breña

Revision index: 1

	Name	Sign	Date
Drawn by	Y.Breña		12/06/15
Reviewed	F. del Olmo		12/06/15

Scale 1:70

DIN A3

EWB 5750 BPP

EWK Torres de Refrigeración S.A

Paseo de la Castellana,163 nº 10
Fact: Torrelaguna 83, Fuente el Saz del Jarama
Madrid, Spain

EWK

Production Department - Technical Office

Drawing number: EWB 5750 BPP

Status: Approved

Language: EN

Page: 1/1

***EWK does not assure any unmentioned measure from the drawing