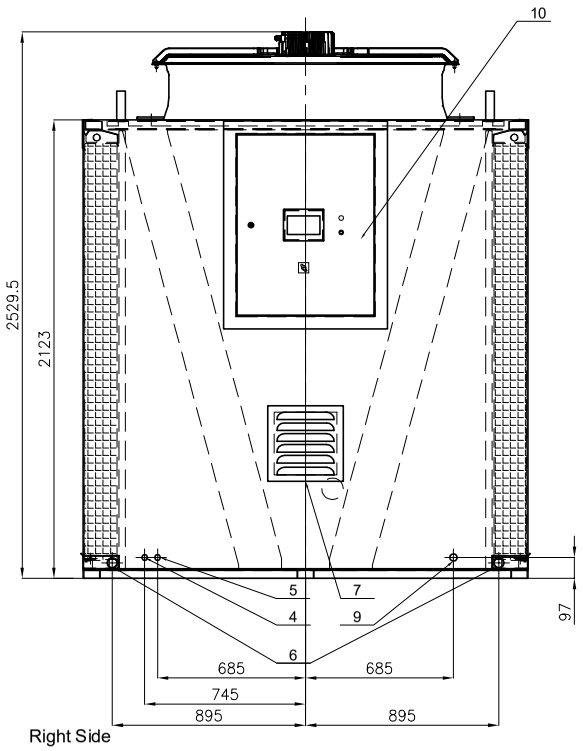

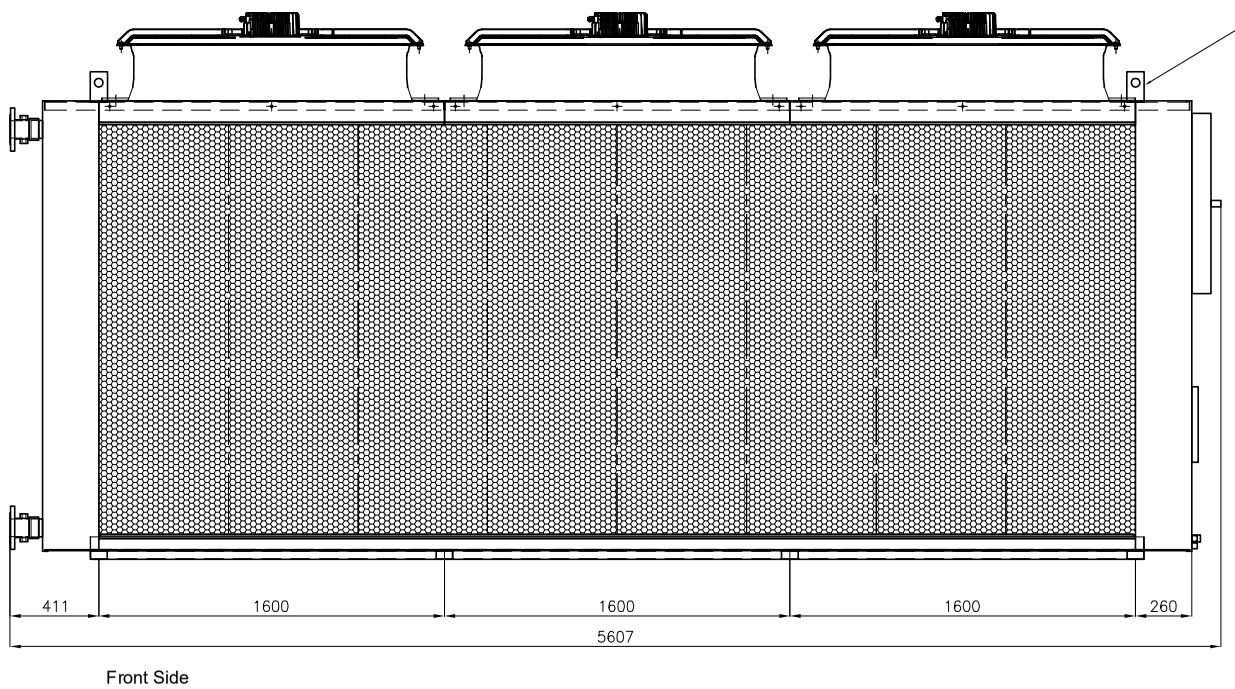

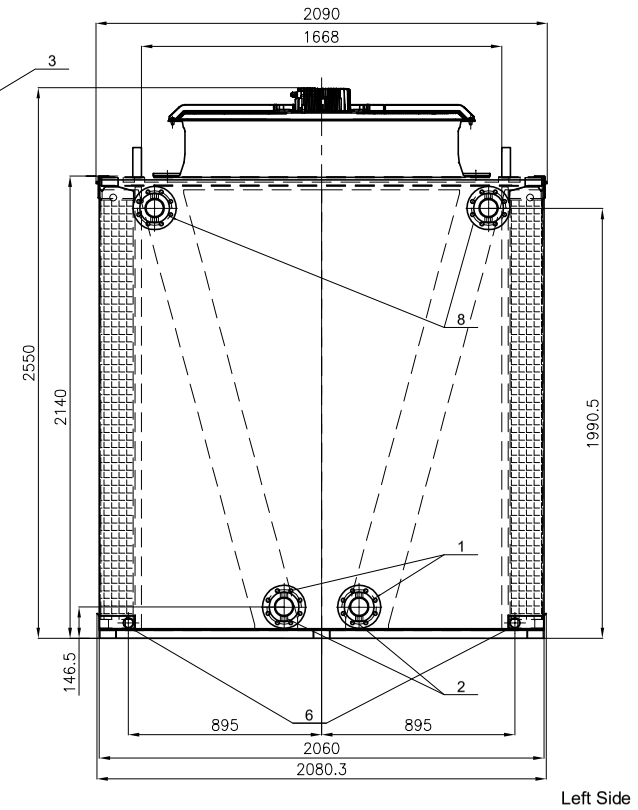

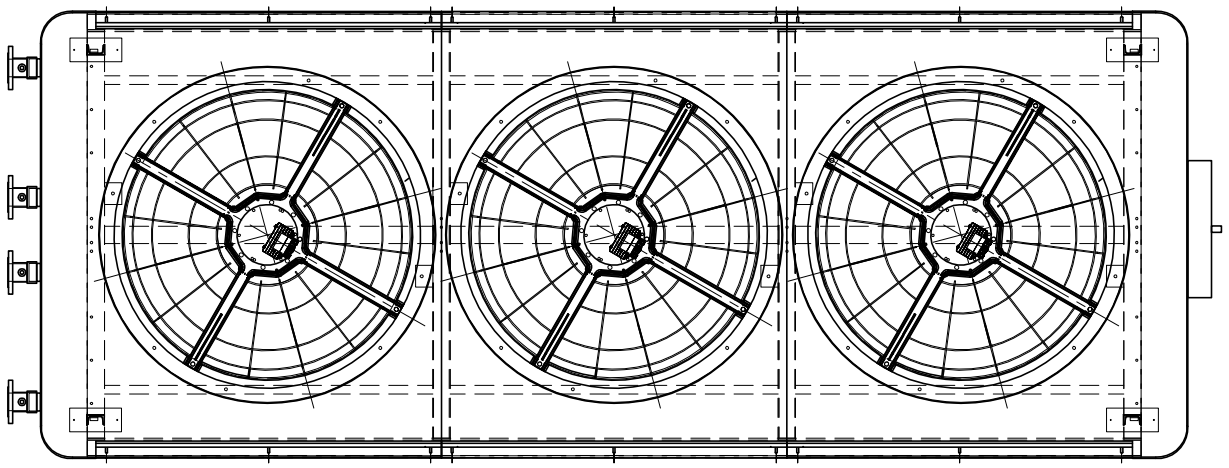

Comments:

10	Control and adiabatic management panel	Right Side
9	Power wires entry	Right Side
8	2x Coil Water Outlet Flanges DN80 PN10 DIN 2576	Left Side
7	Hydraulic Cabinet	Right Side
6	4x Basin drainages 1 1/2" Male Thread	Right & Left
5	Distribution pipes drainage 3/4" Male Thread	Right Side
4	Distribution Water Inlet 3/4" Male Thread	Right Side
3	Handling points	
2	Coil drain 1/2"	Left Side
1	2x Coil Water Inlet Flanges DN80 PN10 DIN2576	Left Side

	A (mm)	B (mm)	C (mm)	Net weight (kg)	Operation weight (kg)	Maximum weight (kg)
EWK-A 1040/3	-	-	-	2192	2559	2624
EWK-A 1040/4	-	-	-	2492*	2917*	2982*

Revision index: 6

Rev.	Changes	Date	Name
6	Hauteur	20/09/21	M.Martin
5	Dimensions	29/04/20	M.Martín
4	Development	09/04/18	Y.Breña
3	Development	23/09/16	Y.Breña
2	Weight	06/03/15	Y.Breña
1	Weight	14/11/14	Y.Breña

	Name	Sign	Date
Drawn by	M.Martín		20/09/21
Reviewed	M.Martín		20/09/21

Scale 1:35

DIN A3

EWK Torres de Refrigeración S.A

Paseo de la Castellana,115 - 4º Izquierda
Fact: Torrelaguna 83, Fuente el Saz del Jarama
Madrid, Spain

Production Department - Technical Office

EWK- A 1040

Drawing number: EWK-A 1040

Status: Approved

Language: EN

Page: 1/1

***EWK does not assure any unmentioned measure from the drawing. All measures are subject to tolerances.